ISSN 2395-1621

Design and Analysis of Auto Disengagement Single Plate Clutch In Automatic Transmission and Its Performance Testing

#1Mr. Nilkanth G. Badhe, #2Prof. S. V. Patil

1nilkanthbadhe@gmail.com
2sukhivindar.patil@sinhgad.edu
1PG student, Mechanical Design Engineering, RMD sinhgad school of engineering, Warje
2Associate professor, Department of Mechanical Engineering RMD sinhgad school of engineering, Pune,India

ABSTRACT

Clutch plays fundamental role for engagement/disengagement in transmission system to transmit torque and power from driving to driven shaft. Disengage clutch Change gear, gradually engage clutch thus three operations are to be performed while moving from one gear to another as in conventional transmission system. Paper describes principle of operation of single plate automatic clutch is that of the ordinary friction plate clutch, with its friction and pressure plates (and springs), but instead of using a foot pedal. So human effort to operate clutch will be reduced. The auto-disengagement single plate automatic clutch employs only one set of compression springs instead of the usual two sets, with this arrangement it is possible to reduce the weights of the centrifugal member's .When the clutch is disengaged and the engine is running at idling speed the hinged bob-weights rest against the lower or inward sides of holes in the flywheel. upward movement of bob weight is responsible to engagement of clutch and further torque and power gets transmitted to driven shaft. ANSYS is used for the calculation of stresses, demo model built up for testing performance of clutch at various speed. This clutch may reduce jerk, transmission losses and increase performace of automatic clutch.

ARTICLE INFO

Article History

Received:30th September 2015

Received in revised form :

2nd October 2015

Accepted:6th October, 2015

Published online :

9th October 2015

Keywords:- **Transmission, Single plate automatic clutch, Bob Weight, Jerk, ANSYS.**

I. INTRODUCTION

A clutch is a mechanical device for quickly and easily connecting or disconnecting a pair of rotating coaxial shafts. It is usually placed between the driving motor and the input shaft to a machine, permitting the engine to be started in an unloaded state. Single plate, dry clutch is among the popular type of clutches in use. A clutch is a mechanism designed to disconnect and reconnect driving and driven members. The need for the clutch seems mainly from the characteristics of the turning-effort developed by the engine over its lower speed range. When idling, the engine develops insufficient torque for the transmission to be positively engaged. To obtain a smooth engagement, the clutch has to be progressively engaged to take up the drive until the torque transmitted from the engine equals that required to propel the vehicle. Also the clutch disconnects the engine from the transmission to change the gear. The clutch, thus, takes up the drive smoothly and also disengages the drive whenever necessary.

Automotive clutches are located between the engine and the transmission. It provides mechanical coupling between the engine and transmission input shaft. Manual transmission cars need a clutch to enable engaging and disengaging the transmission. The clutch engages the transmission gradually by allowing a certain amount of slippage between the flywheel and the transmission input shaft. Essential Features of Clutch**:** 1) Contact surfaces should develop a frictional force that may pickup and hold the load with reasonably low pressure between contact surfaces, 2) Heat of friction should be rapidly dissipated and tendency to grab should be minimum, 3) Surfaces should be backed by a material soft enough to ensure reasonably uniform distribution of pressure.

Types of Frictional Clutches- Disc or plate clutches, Single, plate or disc clutch, Multi plate or disc clutch, Cone clutches, Centrifugal clutches.
a) Single Plate clutch:

Single plate clutch consists of a clutch plate whose both sides are lined or faced with friction material usually ferredo. It is mounted on a hub which is free to move axially along sp-lines or key way on the driven shaft. As shown in fig.1

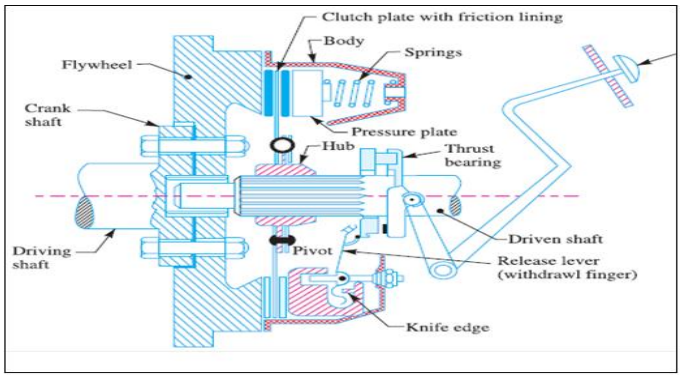

Fig.1 Components of Single plate Clutch

Pressure plate is mounted inside the clutch body which is bolted to flywheel. Both pressure plate and flywheel rotate with engine. Pressure plate pushes clutch plate towards flywheel by a set of strong springs arranged radially inside body. Three levers called release levers or fingers are carried on pivots suspended from the case of body. Levers are arranged such that pressure plate moves away from flywheel by inward movement of thrust bearing. Thrust bearing is mounted upon a forked shaft, moves forward when clutch pedal is pressed.

b) Centrifugal clutch:

The centrifugal clutches are usually incorporated into motor pulleys. It consists of a number of shoes on the inside of a rim of the pulley, as shown in figure 2.

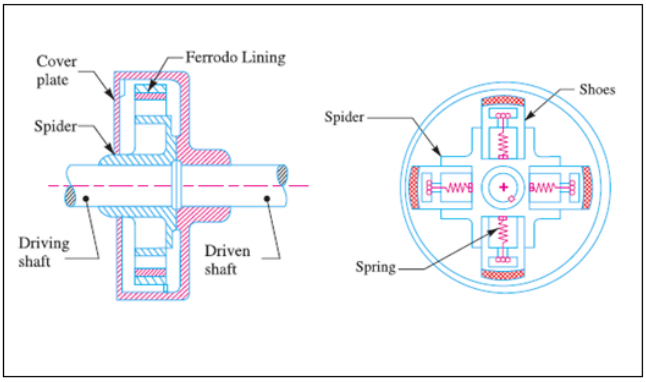

Fig.2 Components of Centrifugal Clutch

The outer surface of the shoes is covered up with a frictional material. These shoes which can move radially in guides, are held against the boss (or spider) on the driving shaft by means of springs. The springs exert a radially inward force which is assumed constant. The mass of shoe, when revolving, causes it to exert a radially outward force (i.e. centrifugal force). The magnitude of this centrifugal force depends upon the speed at which the shoe is revolving. A little consideration will show that when the centrifugal force is less than the spring force, the shoe remains in the same position as when the driving shaft is stationary, but when the centrifugal force is equal to the spring force the shoe is just floating. When the centrifugal force exceeds the spring force, the shoe moves outward and comes into contact with the driven member and presses against it. The force with which the shoe presses against the driven member is the difference of the centrifugal force and the spring force. The increase in speed causes the shoe to press harder and enables more torque to be transmitted thus centrifugal have jerk problem during engagement and disengagement which causes reducing clutch life also transmission losses present in automatic clutches

II. LITERATURE SURVEY

Mamta G. Pawar stated in "Design and Analysis of Clutch Using Sintered Iron as a Friction Material", December 2013. The clutch engages the transmission gradually by allowing a certain amount of slippage between the flywheel and the transmission input shaft. However, the slipping mechanism of the clutch generates heat energy due to friction between the clutch disc and the flywheel. At high sliding velocity, excessive frictional heat is generated which lead to high temperature rise at the clutch disc surface, and this causes thermo-mechanical problems such as thermal deformations and thermo-elastic instability which can lead to thermal cracking, wear and other mode of failure of the clutch disc component. FEM analysis can be done for sintered iron friction material. The stresses and deformation obtained for this friction material is then compared to analysis software result. The analysis is done for worn out friction disc. We can design the clutch using sintered material and analysis can be done using FEM software [1].

According to *K. Tripathi*, the friction clutch must be designed for minimum axial force between the pressure plate and clutch plate. They suggested that for optimum design of friction disc the ratio of inner radius to outer radius should be kept 0.577.There basic design is based on minimum axial force between pressure plate and clutch plate. [2]

Ganesh Raut stated in"Analysis of Multidisc Clutch Using FEA", December 2013, A model of multi plate clutch has been generated in CATIA V5 and then imported in ANSYS workbench for Automobile Applications. He explained structural analysis by varying the friction surfaces material and keeping base material aluminum same. By seeing the results, Comparison is done for both materials to validate better lining material for multi plate clutch by doing analysis on clutch with help of ANSYS Workbench software for find out which material is best for the lining of friction surfaces. We can design the clutch by applying various analysis for improving transmission performance [2].

Nitinchandra R. Patel stated in "Design Of Centrifugal Clutch By Alternative Approaches Used In Different Applications" , April 2013, Utilizing the centrifugal clutch enables the selection of normal torque motors for running loads rather than the selection of high torque motors for starting loads. The torque carrying capacity can be calculated at different speed which is using in transmitting power. The entire work based on conventional design with ferrodo lining, driving shaft, spring, shoe, spider, cover plate, driven shaft. The detail design for various speed is made in the centrifugal clutch to select an operating range of speed under which the application are designed for torque transmission. Also conventional clutch is expensive rather

than compliant clutch. We can use this design for designing of centrifugal clutch [3].

Khamlichi, A and Bezzazi, M. stated in "Optimizing Friction Behavior Of Clutch Facings Using Pin On Disk Test", January, 2008, A rational approach based on Taguchi technique and Pin-on-disk test is used in order to study the friction coefficient behavior of clutch facings as function of material formulation.

They conducted experiments, according to the orthogonal array L8 where the chosen factors are temperature and sliding speed. A complex interaction exists between the surface texture of the produced clutch facings and the used manufacturing process parameters, particularly those associated to molding and grinding operations. They also stated the friction coefficient behaviour of clutch facings was mainly controlled by the sliding speed or by the interaction between the sliding speed and temperature. Important issue in the research and development process of clutch facings consists in obtaining a sufficiently high and stable friction coefficient during the whole product servicing life. One should notice that the manufacturing process used could also have a drastic influence on the final product performances.

In case of important sensitivity to the manufacturing process, the friction coefficient is expected to be irregular. It is necessary therefore, that results of investigation on friction behaviour should take into account both the actual material composition and the manufacturing process parameters. Friction coefficient must also be studied as function of the general rubbing surface parameters which could be idealized to include temperature, the sliding speed, the normal contact pressure, surface roughness and surface state specifications of the counter material. For common applications of clutch facings the last three parameters are likely to remain constant, only behaviour of the friction coefficient as function of temperature and the sliding speed investigated by means of the pin-on disk test system.

III. EXPERIMENTAL SETUP

Single Plate Automatic Clutch:
The Single plate automatic clutch employs only one set of compression springs instead of the usual two sets, with this arrangement it is possible to reduce the weights of the centrifugal members.

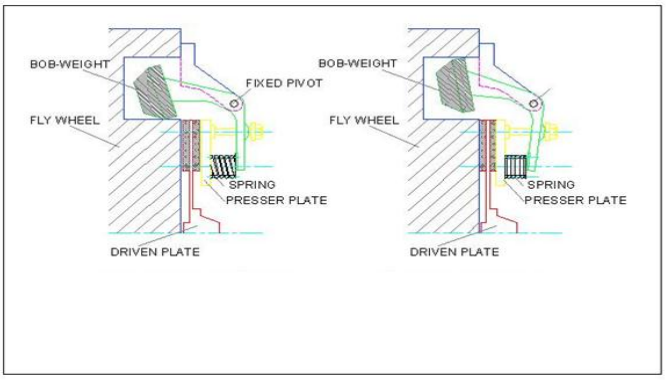

Fig.4 Principle of Single Plate Automatic Clutch

When the clutch is disengaged and the engine is running at idling speed the hinged bob-weights rest against the lower or inward sides of holes in the flywheel. When the engine is accelerated above 700 to 800 rpm, the weights fly outwards and in doing so their lever ends compress the springs as shown in (fig.4), so as to engage the clutch plates. When the full engagement pressure between the clutch members has been attained any further increase in engine speed brings the bob weights against the outsides of the flywheel holes, thus limiting the pressure plate action.

Working of Single Plate Automatic Clutch:

There are three bob weights (A) are used in the three flywheel holes (B). These weights are carried by levers(C) which can rock on the pins mounted on the axis shown at (D). The ends of these levers engage the driving springs at the points (E). Situated between (E) & (D) is a fulcrum lever. A pin (F), carried by the pressure plate, carries a nut and washer which works over the fulcrum.

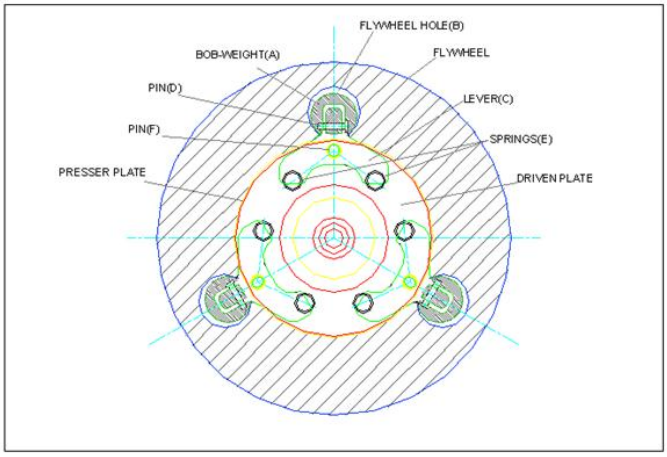

Fig.3 Out Side View of Single Plate Automatic Clutch

And spring load at (E), resisted by (F) operating around (D) will move weights against the inner stops thus releasing the pressure plate when the engine is stationary or idling. As the engine accelerates (A) is thrown out, revolving around (D) and loading up (E) against the pressure plate until the plate contacts the driven plate which then takes the load and relieves this load at fulcrum (F). The clutch withdrawal levers are of orthodox design so that when clutch is operating at speeds above its centrifugal engagement speed the clutch can be disengaged or reengaged for gear changing purpose as in normal hand gear change practice.
For automatic gear changing use is made of servo device to perform clutch operations involved in gear changing.

Test Rig Set Up For Single plate Automatic Clutch:

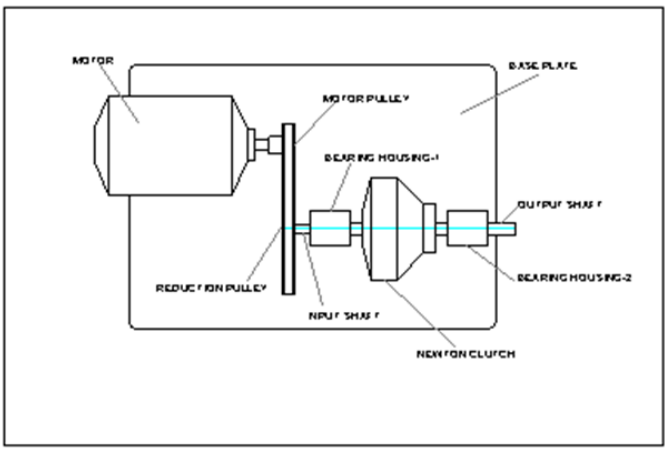

Fig.5 Test Rig Set Up

In order to demonstrate the functionality of the clutch the test rig set up has developed where in the input shaft or driver shaft of clutch is driven by a variable speed motor of AC type, speed control achieved by means of an continuously variable rheostat.

The output shaft shall carry a dyno brake pulley if the brake dynamometer testing is to be carried out in order analyze the torque transmitting capacity of clutch.

IV. ANALYTICAL APPROACH

In this section, Design and analytical process has been discussed,

Input Data,

a) Motor Details,

b) Single Phase AC Motor

c) 230 Volt, 50Hz

d) 0.5 Amps,

e) Power = 0.125Hp

= 93.25 watt

f) Speed = 1500 rpm

T = 0.59365×10^3 N-mm

T Design = 0.742×10^3 N-mm

Design of Input Shaft:

TABLE I
MATERIAL SELECTION FOR SHAFT

Designation	**Ultimate tensile strength N/mm^2**	**Yeild strength N/mm^2**
EN 36C	900	700

According to ASME code permissible values of shear stress may be calculated from various relations.

fs Max = 0.18 Sut

=162 N/mm^2

fs Max = 0.3 Syt

=210 N/mm^2

Calculate Input Torque

$$\text{POWER} = \frac{2\,\Pi\,NT}{60}$$

$$T = \frac{60 \times P}{2 \times \Pi \times N}$$

$$= \frac{60 \times 93.25}{2 \times \Pi \times N}$$

Assuming operation speed = 1500 rpm.

$$= \frac{60 \times 93.25}{2 \times \Pi \times 1500}$$

T = 0.59365 N-m

Assuming 25% overload.

T design = 1.25 x T

= $1.25 \times 0.59365 \times 10^3$

= 0.742×10^3 N-mm.

Check For Torsional Shear Failure Of Shaft:

Assuming minimum section diameter on input shaft = 16 mm

d = 16 mm

Td = $\Pi/16 \times$ fs act x d^3

$$\text{fs act} = \frac{16 \times Td}{\Pi \times d^3}$$

$$= \frac{16 \times 0.742 \times 10^3}{\Pi \times (16)^3}$$

fs act = 0.9226 N/mm^2

As fs act < fs all

I/P shaft is safe under Torsional load.

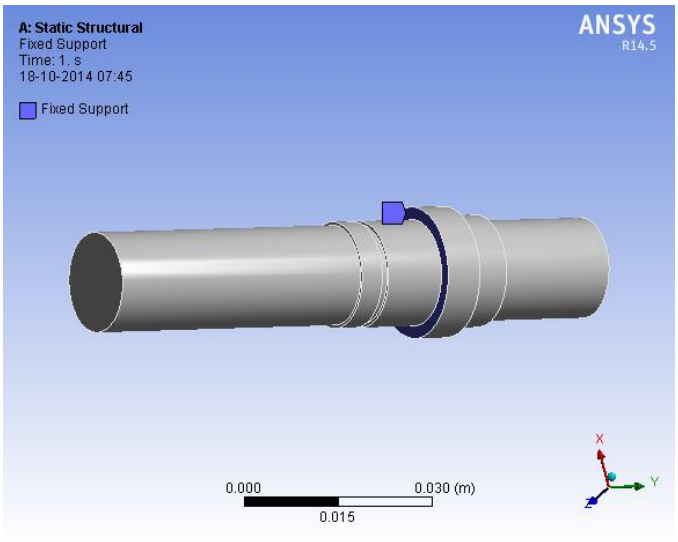

Fig.6 Input Shaft Model

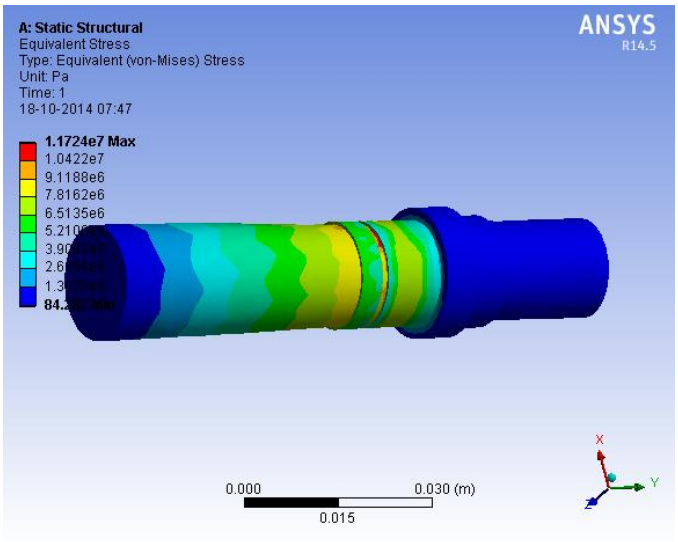

Fig.7 Result after loading condition

Output Shaft:

Analysis of result after loading condition:

Meshing fig as shown in below after applying constraints to output shaft.

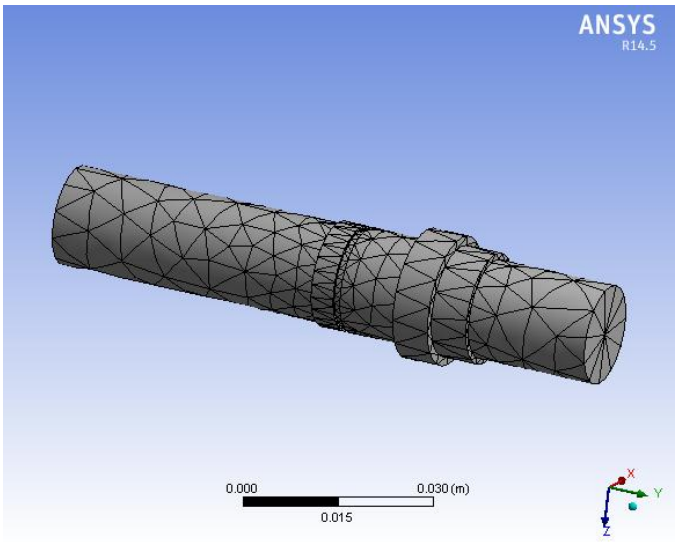

Fig.8 Meshing of Output shaft

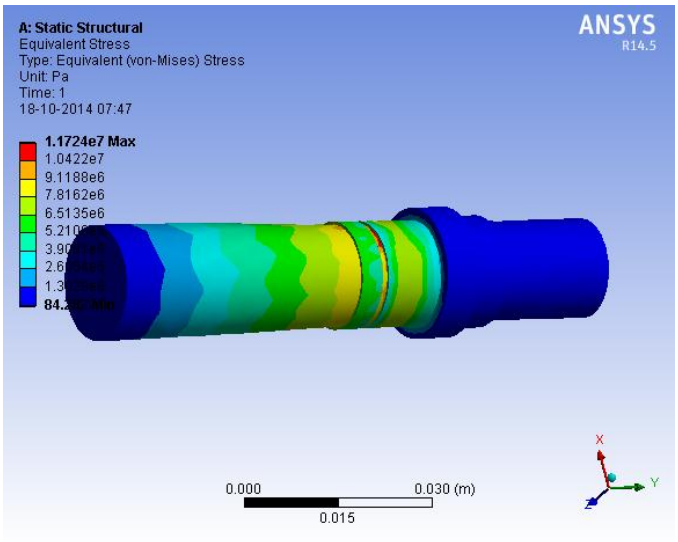

Fig.9 Stress Distribution of output shaft

V.EXPERIMENTATION

After conducting experiments, several trials have been taken at various speed or RPM of clutch and readings are noted also graph compared with graph of standard single plate clutch

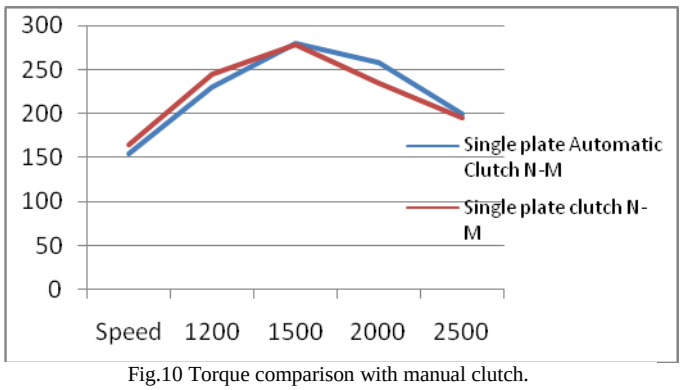

Fig.10 Torque comparison with manual clutch.

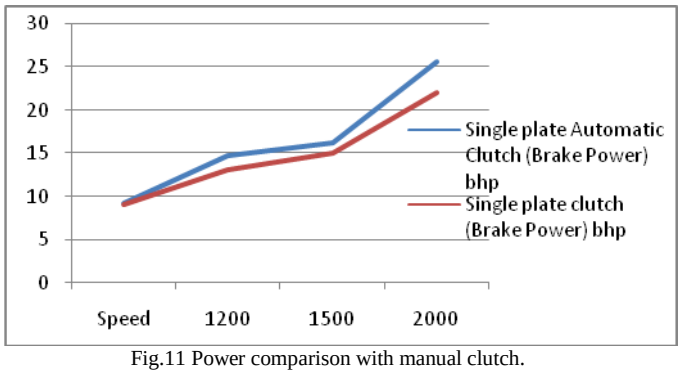

Fig.11 Power comparison with manual clutch.

Above graph represent that power transmission capacity is always better for single plate automatic clutch.

V.CONCLUSION

The single plate automatic clutch is having smooth engagement 95% during power transmission because of using single plate for power and torque transmission so that jerk during transmission is eliminated. It is having higher torque/ power transmission capacity and it can be analysed by testing performance of clutch. due to no jerk (only 5%) there is less vibration and less wear during torque transmission and these clutch has higher life as compare to centrifugal / Single plate clutch.

Test rig is compact in size and easier to calculate Power Vs Speed, Torque Vs speed, Brake Power Vs Speed readings. We can conclude performance of clutch by comparing reading with standards reading at various speeds. So even it can be used for heavy vehicles for automatic transmission due to high torque / power transmission capacity.

ACKNOWLEDGMENT

Authors are thankful to Dr. C. B. Bangal, Principal, RMD sinhgad school of Engineering, Pune (MH) India, for his kind support.

REFERENCES

[1] Mamta G. Pawar, “Design and Analysis of Clutch Using Sintered Iron as a Friction Material”, International Journal of Innovative Technology and Exploring Engineering, December 2013.

[2] Ganesh Raut, “Analysis of Multidisc Clutch Using FEA”, International Journal of Engineering Trends and Technology, December-2013.pp 23-47

[3] Nitinchandra R. Patel, "Design of Centrifugal Clutch By Alternative Approaches Used In Different Applications", International Journal of Innovative Research in Science, April-2013.
[4] Khamlichi, A and Bezzazi, M, "Optimizing Friction Behavior Of Clutch Facings Using Pin On Disk Test", International Journal of Physical Sciences Vol. 3 (2), pp. 065-070, January, 2008.
Report and Manual
[5] Altra Industrial Motion, Permanent Magnet and Magnetic Particle Clutches and Brakes. Port Technology International, Difference between dynamic and static coefficient of friction
[6] Modern Transmission Systems, Arthur W Judge
[7] Engg. Mechanism, Erdman and Sandor
[8] Machine Design, R S Khurmi
[9] P S G Design data Book.
[10] Patent no-608,083, England, September. 5, 1956, Centrifugal Friction Clutches, 1960.
[11] Patent no-178,666, England, December 8, 1937, Centrifugal Clutch, 1937.

